Solid State Relays

G3NA

The reliable choice for Hockey-puck-style Solid State Relays. Available in a Wide Range of Currents.

- All models feature the same compact dimensions to provide a uniform mounting pitch.
- Built-in varistor effectively absorbs external surges. (except G3NA-D210B-UTU)
- Operation indicator enables monitoring operation.
- Protective cover for greater safety.
- Certified by UL, CSA, and TÜV.

For the most recent information on models that have been certified for safety standards, refer to your OMRON website.

⚠ Refer to *Safety Precautions for All Solid State Relays*.

The following models are scheduled to close the order at the end of March 2020.

- Models without "-UTU" (Not certified by TÜV)
- Models with rated input voltage "AC 100-120" and "AC 200-240".

Model Number Structure

■ Model Number Legend

G3NA-□□□□□-□

1 2 3 4 5 6 7

1. Basic Model Name
G3NA: Solid State Relay

2. Load Power Supply
Blank: AC output
D: DC output

3. Rated Load Power Supply Voltage
2: 200 VAC or 200 VDC
4: 400 VAC

4. Rated Load Current

Note: Not all combinations of current and voltage are available.

05: 5 A
10: 10 A
20: 20 A
25: 25 A
40: 40 A
50: 50 A
75: 75 A
90: 90 A

5. Terminal Type
B: Screw terminals

6. Zero Cross Function
Blank: Equipped with zero cross function (AC-output models only)

7. Certification
UTU: Certified by UL, CSA, and TÜV

Ordering Information

■ List of Models

Isolation	Zero cross function	Indicator	Applicable output load (See note 1.)	Rated input voltage	Model
Phototriac	Yes	Yes	5 A at 24 to 240 VAC (See note 2.)	5 to 24 VDC	G3NA-205B-UTU DC5-24
Photocoupler				100 to 240 VAC	G3NA-205B-UTU AC100-240
Phototriac			10 A at 24 to 240 VAC (See note 2.)	5 to 24 VDC	G3NA-210B-UTU DC5-24
Photocoupler				100 to 240 VAC	G3NA-210B-UTU AC100-240
Phototriac			20 A at 24 to 240 VAC (See note 2.)	5 to 24 VDC	G3NA-220B-UTU DC5-24
Photocoupler				100 to 240 VAC	G3NA-220B-UTU AC100-240
Phototriac			25 A at 24 to 240 VAC (See note 2.)	5 to 24 VDC	G3NA-225B-UTU DC5-24
Photocoupler				100 to 240 VAC	G3NA-225B-UTU AC100-240
Phototriac			40 A at 24 to 240 VAC (See note 2.)	5 to 24 VDC	G3NA-240B-UTU DC5-24
Photocoupler				100 to 240 VAC	G3NA-240B-UTU AC100-240
Phototriac			50 A at 24 to 240 VAC (See note 2.)	5 to 24 VDC	G3NA-250B-UTU DC5-24
Photocoupler				100 to 240 VAC	G3NA-250B-UTU AC100-240
Phototriac			75 A at 24 to 240 VAC (See note 2.)	5 to 24 VDC	G3NA-275B-UTU-2 DC5-24
Photocoupler				100 to 240 VAC	G3NA-275B-UTU-2 AC100-240
Phototriac			90 A at 24 to 240 VAC (See note 2.)	5 to 24 VDC	G3NA-290B-UTU-2 DC5-24
Photocoupler				100 to 240 VAC	G3NA-290B-UTU-2 AC100-240
			10 A at 200 to 480 VAC	5 to 24 VDC	G3NA-410B-UTU DC5-24
				100 to 240 VAC	G3NA-410B-UTU AC100-240
			20 A at 200 to 480 VAC	5 to 24 VDC	G3NA-420B-UTU DC5-24
				100 to 240 VAC	G3NA-420B-UTU AC100-240
			25 A at 200 to 480 VAC	5 to 24 VDC	G3NA-425B-UTU-2 DC5-24
				100 to 240 VAC	G3NA-425B-UTU-2 AC100-240
			40 A at 200 to 480 VAC	5 to 24 VDC	G3NA-440B-UTU-2 DC5-24
				100 to 240 VAC	G3NA-440B-UTU-2 AC100-240
			50 A at 200 to 480 VAC	5 to 24 VDC	G3NA-450B-UTU-2 DC5-24
				100 to 240 VAC	G3NA-450B-UTU-2 AC100-240
			75 A at 200 to 480 VAC	5 to 24 VDC	G3NA-475B-UTU-2 DC5-24
				100 to 240 VAC	G3NA-475B-UTU-2 AC100-240
			90 A at 200 to 480 VAC	5 to 24 VDC	G3NA-490B-UTU-2 DC5-24
				100 to 240 VAC	G3NA-490B-UTU-2 AC100-240
	---		10 A at 5 to 200 VDC	5 to 24 VDC	G3NA-D210B-UTU DC5-24
				100 to 240 VAC	G3NA-D210B-UTU AC100-240

*All models are certified by UL, CSA, and TÜV.

Note: 1. The applicable load is the value for when the SSR is used with silicon grease applied to the specified heat sink. The applicable load depends on the ambient temperature. Refer to *Load Current vs. Ambient Temperature* in *Engineering Data* on page 6.

2. Loss time increases under 75 VAC. (Refer to page 16.) Confirm operation with the actual load.

■ Accessories (Order Separately)

One-touch Mounting Plates

Model
R99-12 FOR G3NA

Heat Sinks

DIN-track Mounting

Model	Applicable SSR
Y92B-N50	G3NA-205B-UTU, G3NA-210B-UTU, G3NA-D210B-UTU, G3NA-410B-UTU, G3NE-210T(L)-US
Y92B-N100	G3NA-220B-UTU, G3NA-420B-UTU, G3NE-220T(L)-US
Y92B-N150	G3NA-225B-UTU, G3NA-240B-UTU, G3NA-425B-UTU-2, G3NA-440B-UTU-2
Y92B-P250	G3NA-250B-UTU, G3NA-450B-UTU-2
Y92B-P250NF	G3NA-275B-UTU-2, G3NA-290B-UTU-2, G3NA-475B-UTU-2, G3NA-490B-UTU-2

Screw Mounting

Model	Applicable SSR
Y92B-A100	G3NA-205B-UTU, G3NA-210B-UTU, G3NA-D210B-UTU, G3NA-220B-UTU, G3NA-410B-UTU, G3NA-420B-UTU
Y92B-A150N	G3NA-225B-UTU, G3NA-240B-UTU, G3NA-425B-UTU-2, G3NA-440B-UTU-2
Y92B-A250	G3NA-440B-UTU-2

Specifications

■ Ratings

Input (at an Ambient Temperature of 25°C)

Model	Rated voltage	Operating voltage	Impedance (See note 1.) Input current	Voltage level	
				Must operate voltage	Must release voltage
G3NA-2□□B-UTU(-2)	5 to 24 VDC	4 to 32 VDC	7 mA max. (See note 2.)	4 VDC max.	1 VDC min.
G3NA-475B-UTU-2 G3NA-490B-UTU-2	100 to 240 VAC	75 to 264 VAC	72 kΩ±20%	75 VAC max.	20 VAC min.
G3NA-410B-UTU G3NA-420B-UTU G3NA-425B-UTU-2	5 to 24 VDC	4 to 32 VDC	5 mA max. (See note 2.)	4 VDC max.	1 VDC min.
G3NA-440B-UTU-2 G3NA-450B-UTU-2 G3NA-D210B-UTU	100 to 240 VAC	75 to 264 VAC	72 kΩ±20%	75 VAC max.	20 VAC min.

Note: 1. The input impedance is measured at the maximum value of the rated supply voltage (for example, with the model rated at 100 to 240 VAC, the input impedance is measured at 240 VAC).

2. With constant current input circuit system.

Output

Model	Applicable load					
	Rated load voltage	Load voltage range	Load current (See note 1.)		Inrush current	V_{DRM} V_{CEO} (Reference value)
			With heat sink (See note 2.)	Without heat sink		
G3NA-205B-UTU	24 to 240 VAC	19 to 264 VAC	0.1 to 5 A (at 40°C)	0.1 to 3 A (at 40°C)	60 A (60 Hz, 1 cycle)	600 V (V_{DRM})
G3NA-210B-UTU			0.1 to 10 A (at 40°C)	0.1 to 4 A (at 40°C)	150 A (60 Hz, 1 cycle)	
G3NA-220B-UTU			0.1 to 20 A (at 40°C)	0.1 to 4 A (at 40°C)	220 A (60 Hz, 1 cycle)	
G3NA-225B-UTU			0.1 to 25 A (at 40°C)	0.1 to 4 A (at 40°C)	220 A (60 Hz, 1 cycle)	
G3NA-240B-UTU			0.1 to 40 A (at 40°C)	0.1 to 6 A (at 40°C)	440 A (60 Hz, 1 cycle)	
G3NA-250B-UTU			0.1 to 50 A (at 40°C)	0.1 to 6 A (at 40°C)	440 A (60 Hz, 1 cycle)	
G3NA-275B-UTU-2			1 to 75 A (at 40°C)	1 to 7 A (at 40°C)	800 A (60 Hz, 1 cycle)	
G3NA-290B-UTU-2			1 to 90 A (at 40°C)	1 to 7 A (at 40°C)	1,000 A (60 Hz, 1 cycle)	
G3NA-410B-UTU	200 to 480 VAC	180 to 528 VAC	0.2 to 10 A (at 40°C)	0.2 to 4 A (at 40°C)	150 A (60 Hz, 1 cycle)	1,200 V (V_{DRM})
G3NA-420B-UTU			0.2 to 20 A (at 40°C)	0.2 to 4 A (at 40°C)	220 A (60 Hz, 1 cycle)	
G3NA-425B-UTU-2			0.2 to 25 A (at 40°C)	0.2 to 4 A (at 40°C)	220 A (60 Hz, 1 cycle)	
G3NA-440B-UTU-2			0.2 to 40 A (at 40°C)	0.2 to 6 A (at 40°C)	440 A (60 Hz, 1 cycle)	
G3NA-450B-UTU-2			0.2 to 50 A (at 40°C)	0.2 to 6 A (at 40°C)	440 A (60 Hz, 1 cycle)	
G3NA-475B-UTU-2			1 to 75 A (at 40°C)	1 to 7 A (at 40°C)	800 A (60 Hz, 1 cycle)	
G3NA-490B-UTU-2			1 to 90 A (at 40°C)	1 to 7 A (at 40°C)	1,000 A (60 Hz, 1 cycle)	
G3NA-D210B-UTU	5 to 200 VDC	4 to 220 VDC	0.1 to 10 A (at 40°C)	0.1 to 4 A (at 40°C)	20 A (10 ms)	400 V (V_{CEO})

Note: 1. The load current varies depending on the ambient temperature. Refer to *Load Current vs. Ambient Temperature* under *Engineering Data* on page 6.

2. When an OMRON Heat Sink (refer to *Options (Order Separately)*) or a heat sink of the specified size is used.

■ Characteristics

Item	G3NA-205B-UTU	G3NA-210B-UTU	G3NA-220B-UTU	G3NA-225B-UTU	G3NA-240B-UTU	G3NA-250B-UTU	G3NA-275B-UTU-2	G3NA-290B-UTU-2	G3NA-410B-UTU	G3NA-420B-UTU	G3NA-425B-UTU-2	G3NA-440B-UTU-2	G3NA-450B-UTU-2	G3NA-475B-UTU-2	G3NA-490B-UTU-2	G3NA-D210B-UTU
Operate time	1/2 of load power source cycle + 1 ms max. (DC input) 3/2 of load power source cycle + 1 ms max. (AC input)															1 ms max. (DC input) 30 ms max. (AC input)
Release time	1/2 of load power source cycle + 1 ms max. (DC input) 3/2 of load power source cycle + 1 ms max. (AC input)															5 ms max. (DC input) 30 ms max. (AC input)
Output ON voltage drop	1.6 V (RMS) max.								1.8 V (RMS) max.							1.5 V max.
Leakage current	5 mA max. (at 100 VAC) 10 mA max. (at 200 VAC)								10 mA max. (at 200 VAC) 20 mA max. (at 400 VAC)							5 mA max. (at 200 VDC)
Insulation resistance	100 MΩ min. (at 500 VDC)															
Dielectric strength	2,500 VAC, 50/60 Hz for 1 min								4,000 VAC, 50/60 Hz for 1 min							2,500 VAC, 50/60 Hz for 1 min
Vibration resistance	Destruction: 10 to 55 to 10 Hz, 0.75-mm single amplitude (1.5-mm double amplitude)															
Shock resistance	Destruction: 1,000 m/s^2															
Ambient temperature	Operating:–30°C to 80°C (with no icing or condensation) Storage:–30°C to 100°C (with no icing or condensation)															
Ambient humidity	Operating: 45% to 85%															
Weight	Approx. 60 g				Approx. 70 g		Approx. 120 g		Approx. 80 g					Approx. 120 g		Approx. 70 g

Engineering Data

Load Current vs. Ambient Temperature

G3NA-205B-UTU

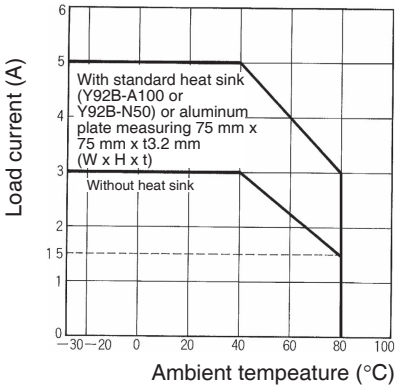

G3NA-210B-UTU
G3NA-410B-UTU

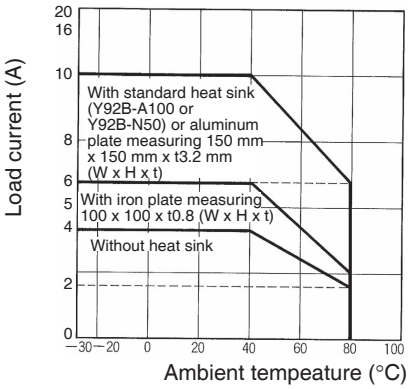

G3NA-220B-UTU
G3NA-420B-UTU

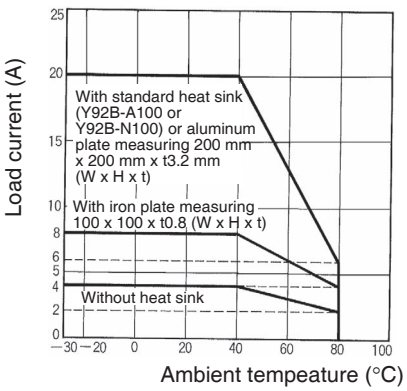

G3NA-225B-UTU
G3NA-425B-UTU-2

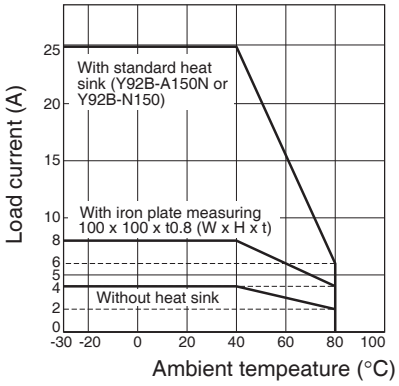

G3NA-240B-UTU

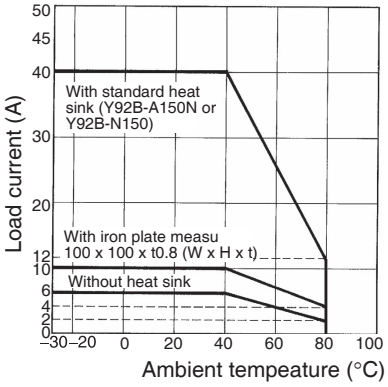

G3NA-440B-UTU-2

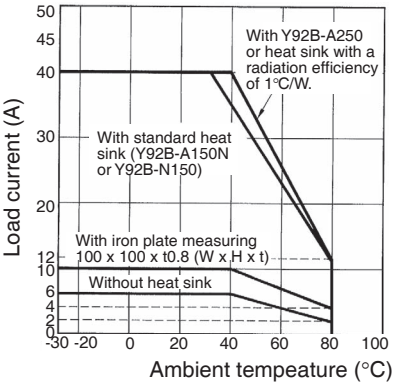

G3NA-250B-UTU
G3NA-450B-UTU-2

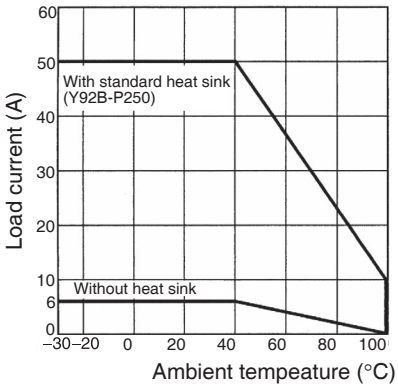

G3NA-275B-UTU-2
G3NA-475B-UTU-2

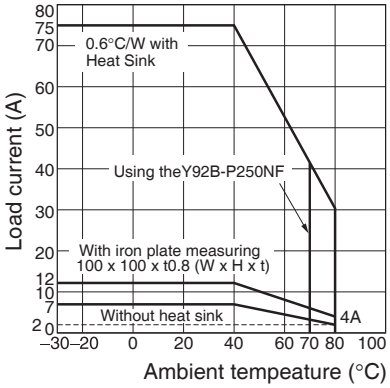

G3NA-290B-UTU-2
G3NA-490B-UTU-2

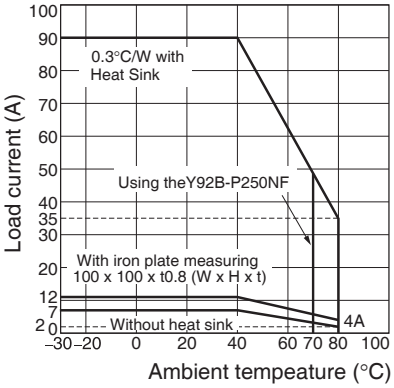

Note: The ambient operating temperature of the Y92B-P250NF is −30 to 70°C. Be sure the operating temperature is within this range.

G3NA-D210B-UTU

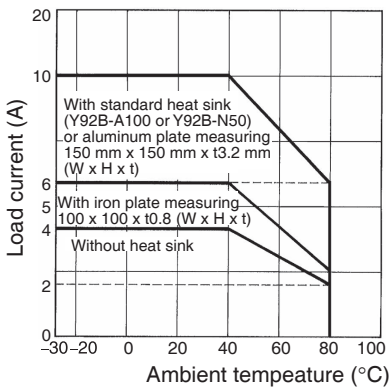

One Cycle Surge Current

The values shown by the solid line are for non-repetitive inrush currents.
Keep the inrush current below the values shown by the dotted line if it occurs repetitively.

G3NA-205B-UTU

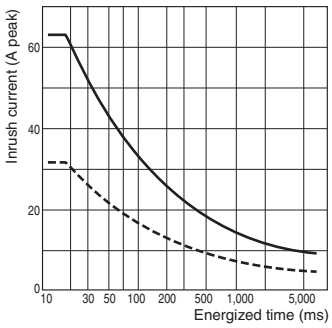

G3NA-210B-UTU
G3NA-410B-UTU

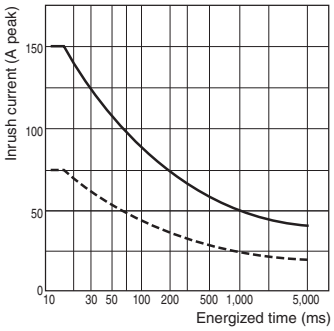

G3NA-220B-UTU
G3NA-225B-UTU
G3NA-420B-UTU
G3NA-425B-UTU-2

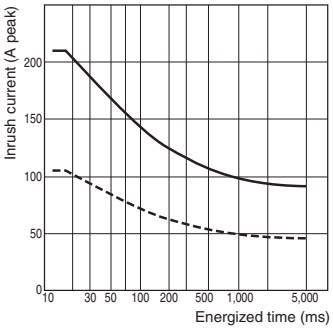

G3NA-240B-UTU
G3NA-250B-UTU
G3NA-440B-UTU-2
G3NA-450B-UTU-2

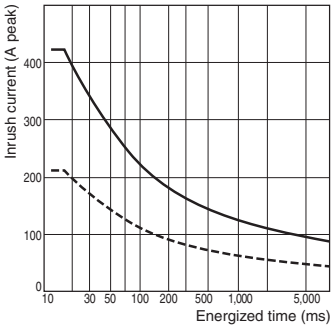

G3NA-275B-UTU-2
G3NA-475B-UTU-2

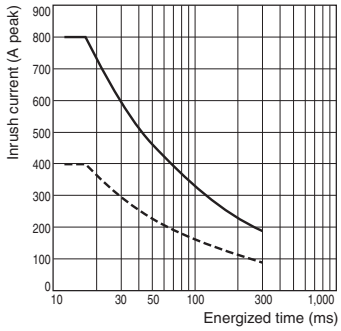

G3NA-290B-UTU-2
G3NA-490B-UTU-2

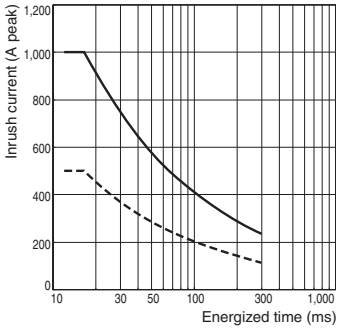

G3NA-D210B-UTU

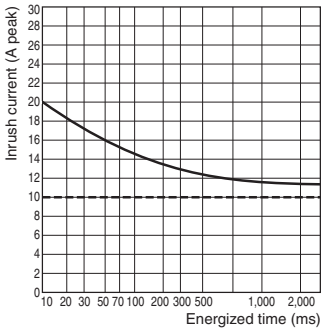

Heat Sink Area vs. Load Current

G3NA-220B-UTU

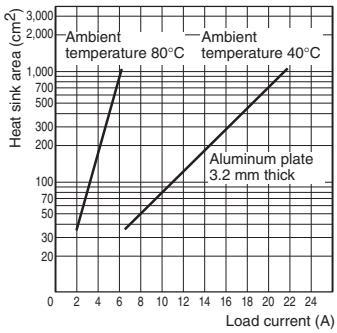

Note: The heat sink area refers to the combined area of the sides of the heat sink that radiate heat. For example, when a current of 18 A is allowed to flow through the SSR at 40°C, the graph shows that the heat sink area is about 450 cm². Therefore, if the heat sink is square, one side of the heat sink must be 15 cm ($\sqrt{450\ (cm^2)/2}$) or longer.

Thermal Resistance Rth (Back of Junction SSR) (Examples)

Model	Rth (°C/W)
G3NA-205B-UTU	3.22
G3NA-210B-UTU	2.62
G3NA-220B-UTU G3NA-225B-UTU	1.99
G3NA-240B-UTU G3NA-250B-UTU G3NA-275B-UTU G3NA-290B-UTU G3NA-410B-UTU G3NA-420B-UTU G3NA-425B-UTU-2 G3NA-440B-UTU-2 G3NA-450B-UTU-2 G3NA-475B-UTU G3NA-490B-UTU	0.45
G3NA-D210B-UTU	2.62

Thermal Resistance Rth of Heat Sinks (Examples)

Model	Rth (°C/W)
Y92B-N50	2.8
Y92B-N100	1.63
Y92B-N150	1.38
Y92B-A100	1.63
Y92B-A150N	1.37
Y92B-A250	1.00
Y92B-P250	0.70
Y92B-P250NF	0.46

Note: When using a commercially available heat sink, use one with a thermal resistance equal to or less that the OMRON Heat Sink.

Dimensions

■ Relays

Note: All units are in millimeters unless otherwise indicated.

G3NA-205B-UTU, G3NA-210B-UTU, G3NA-220B-UTU, G3NA-225B-UTU

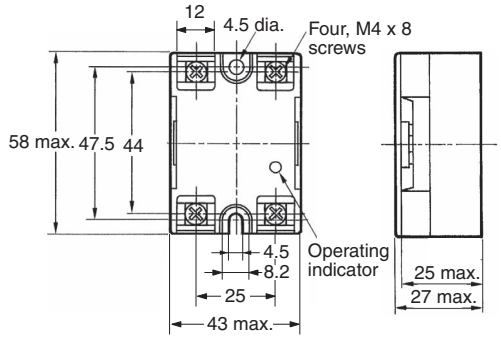

Mounting Holes

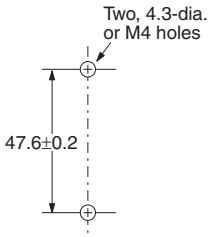

Terminal Arrangement/ Internal Connections (Top View)

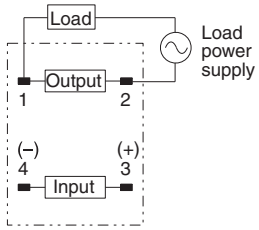

G3NA-410B-UTU, G3NA-420B-UTU, G3NA-425B-UTU-2

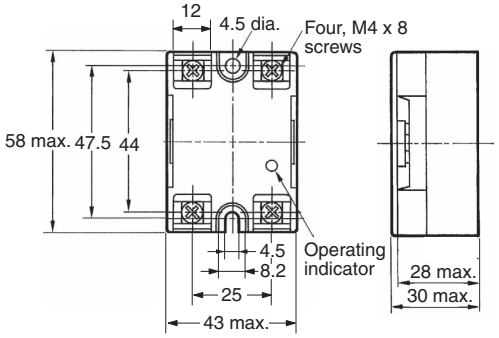

Mounting Holes

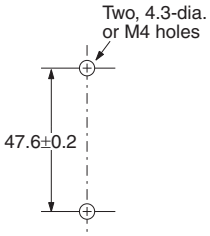

Terminal Arrangement/ Internal Connections (Top View)

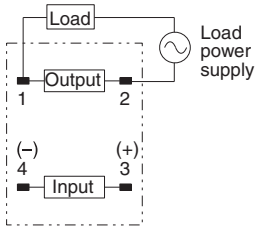

G3NA-240B-UTU, G3NA-250B-UTU, G3NA-440B-UTU-2, G3NA-450B-UTU-2
G3NA-275B-UTU-2, G3NA-475B-UTU-2, G3NA-290B-UTU-2, G3NA-490B-UTU-2

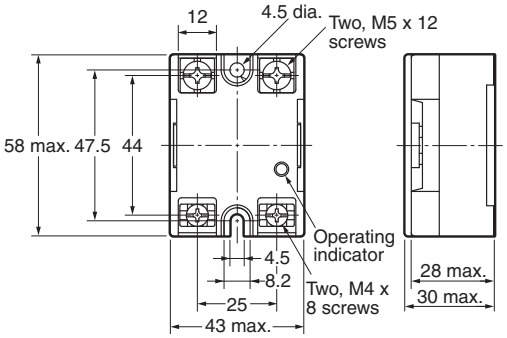

Mounting Holes

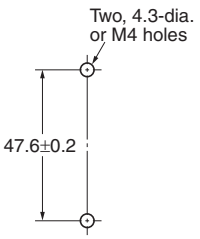

Terminal Arrangement/ Internal Connections (Top View)

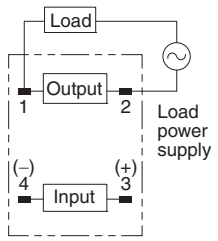

G3NA-D210B-UTU

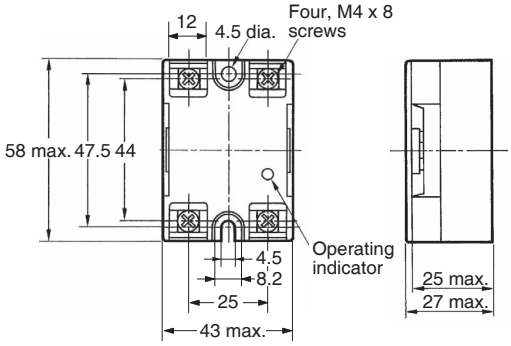

Mounting Holes

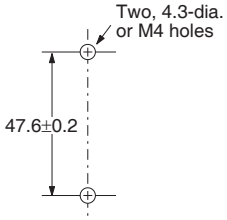

Terminal Arrangement/ Internal Connections (Top View)

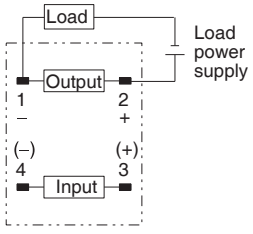

Note: When connecting the load, either the positive or negative side of the load terminals can be connected.

■ Options (Order Separately)

One-touch Mounting Plate

The One-touch Mounting Plate is used to mount the GN3A to a DIN Track.

R99-12 FOR G3NA (for the G3NA and G3NE)

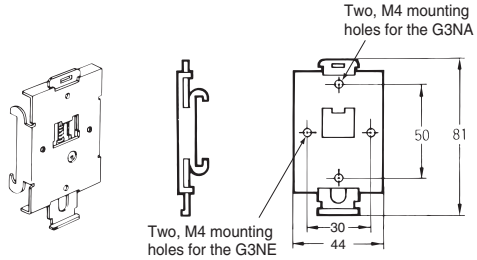

To mount the Relay to DIN Track, first mount it to the One-touch Mounting Plate and then attach it to the DIN Track as shown in the diagram.

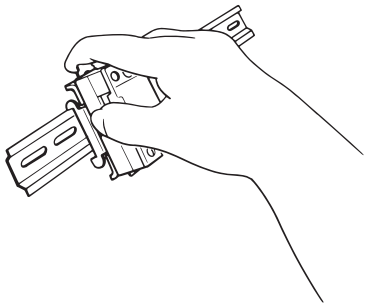

To remove the Relay from the DIN Track, pull down on the tab with a screwdriver in the direction of the arrow.

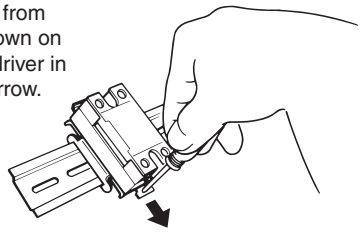

- When a Relay is mounted to DIN Track, use it within the rating for a Relay without a heat sink.
- Use the following DIN Tracks: PFP-100N or PFP-100N2.

Heat Sinks

Y92B-N50 Heat Sink (for the G3NA-205B-UTU, G3NA-210B-UTU, G3NA-410B-UTU, G3NA-D210B-UTU, G3NE-210T(L)-US)

For surface mounting, a 30% derating of the load current is required (from the *Load Current vs. Ambient Temperature* graphs).

The orientation indicated by the external dimensions is not the correct mounting orientation. When opening mounting holes, refer to the mounting hole dimensions.

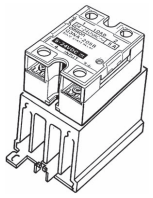

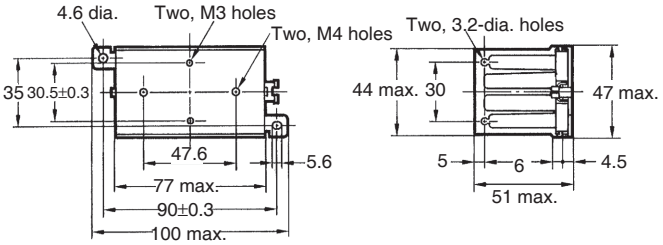

Mounting Holes

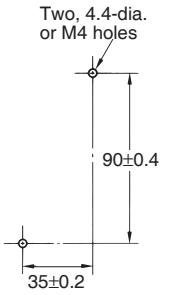

Weight: approx. 200 g

Y92B-N100 Heat Sink (for the G3NA-220B-UTU, G3NA-420B-UTU, G3NE-220T(L)-US)

For surface mounting, a 30% derating of the load current is required (from the *Load Current vs. Ambient Temperature* graphs).

The orientation indicated by the external dimensions is not the correct mounting orientation. When opening mounting holes, refer to the mounting hole dimensions.

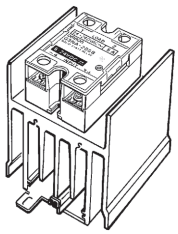

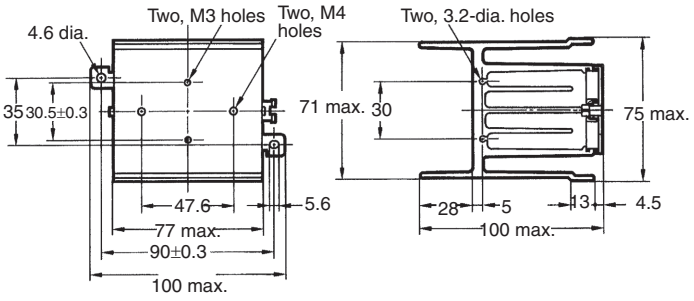

Mounting Holes

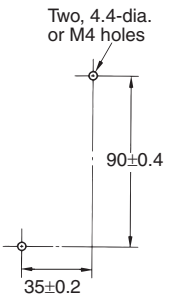

Weight: approx. 400 g

Y92B-N150 Heat Sink (for the G3NA-225B-UTU, G3NA-240B-UTU, G3NA-425B-UTU-2, G3NA-440B-UTU-2)

For surface mounting, a 30% derating of the load current is required (from the *Load Current vs. Ambient Temperature* graphs).

The orientation indicated by the external dimensions is not the correct mounting orientation. When opening mounting holes, refer to the mounting hole dimensions.

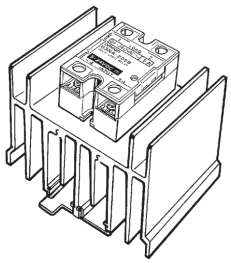

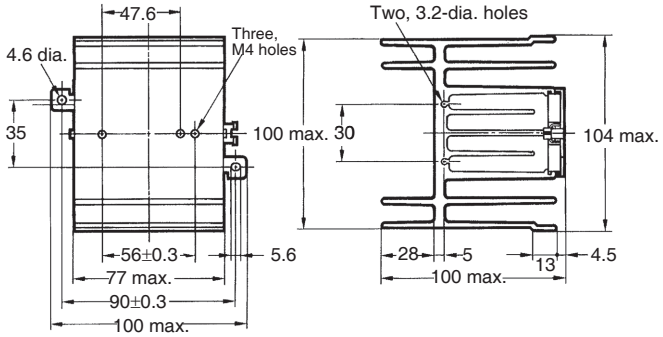

Mounting Holes

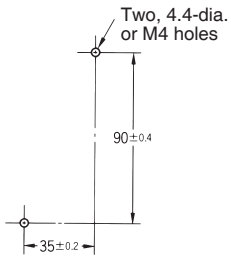

Weight: approx. 560 g

Y92B-P250NF Heat Sink (for the G3NA-275B-UTU-2, G3NA-475B-UTU-2, G3NA-290B-UTU-2, G3NA-490B-UTU-2)

For mounting method, refer to "Precautions for Correct Use".

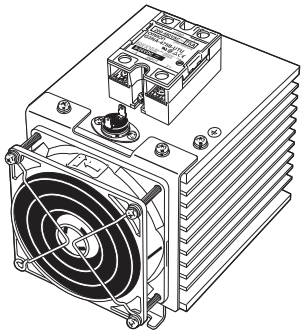

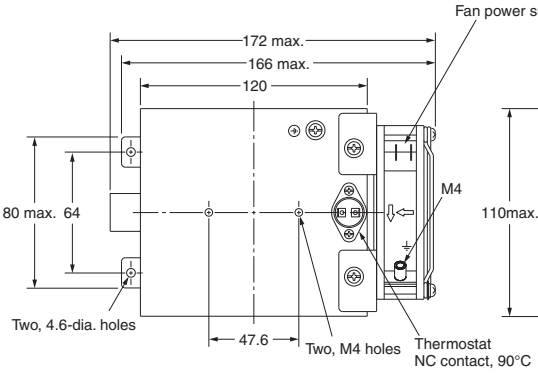

Mounting Holes

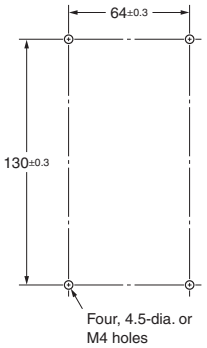

Y92B-P250 (for the G3NA-250B-UTU, G3NA-450B-UTU-2)

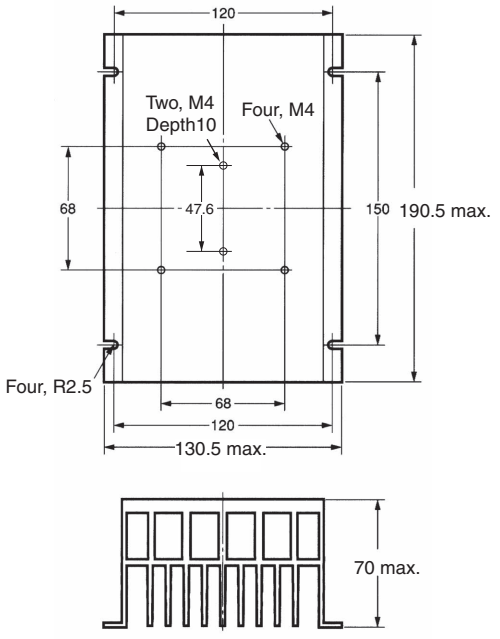

Mounting Holes

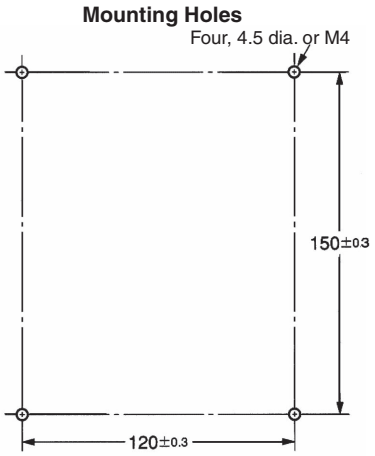

Y92B-A100 Screw Mounting Heat Sink (for the G3NA-205B-UTU, G3NA-210B-UTU, G3NA-220B-UTU, G3NA-410B-UTU, G3NA-420B-UTU, G3NA-D210B)

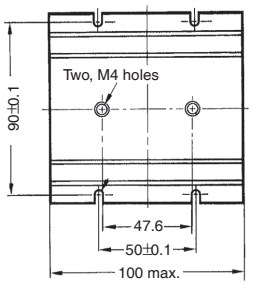

Weight: approx. 210 g

Y92B-A150N Screw Mounting Heat Sink (for the G3NA-225B-UTU, G3NA-240B-UTU, G3NA-425B-UTU, G3NA-440B-UTU-2)

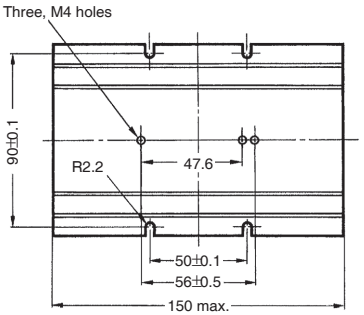

Weight: approx. 310 g

Y92B-A250 Heat Sink (for the G3NA-440B-UTU-2)

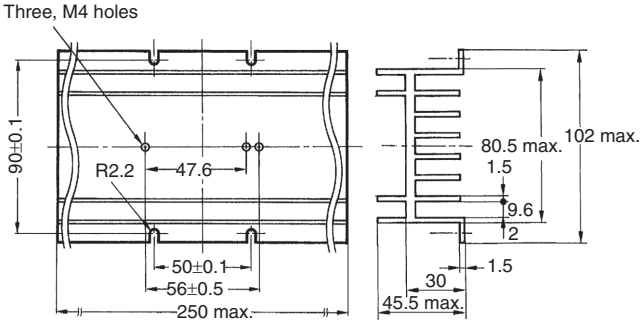

Weight: approx. 510 g

Mounting Holes
Y92B-A100
Y92B-A150N
Y92B-A250

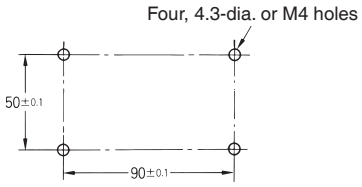

For surface mounting, a 30% derating of the load current is required (from the *Load Current vs. Ambient Temperature* graphs).

The orientation indicated by the external dimensions is not the correct mounting orientation. When opening mounting holes, refer to the mounting hole dimensions.

Safety Precautions

⚠ CAUTION	
Touching the charged section may occasionally cause minor electric shock. Do not touch the G3NA terminal section (the charged section) when the power supply is ON. Be sure to attach the cover before use.	
The G3NA and heat sink will be hot and may occasionally cause minor burns. Do not touch the G3NA or the heat sink either while the power supply is ON, or immediately after the power is turned OFF.	
The internal snubber circuit is charged and may occasionally cause minor electric shock. Do not touch the G3NA's main circuit terminals immediately after the power is turned OFF.	
Be sure to conduct wiring with the power supply turned OFF, and always attach the terminal cover after completing wiring. Touching the terminals when they are charged may occasionally result in minor electric shock.	
Do not apply a short-circuit to the load side of the G3NA. The G3NA may rupture. To protect against short-circuit accidents, install a protective device, such as a quick-burning fuse, on the power supply line.	

■ Precautions for Safe Use

Although OMRON continuously strives to improve the quality and reliability of our relays, the G3NA contains semiconductors, which are generally prone to occasional malfunction and failure. Maintaining safety is particularly difficult if a relay is used outside of its ratings. Always use the G3NA within the rated values. When using the G3NA, always design the system to ensure safety and prevent human accidents, fires, and social damage even in the event of G3NA failure, including system redundancy, measures to prevent fires from spreading, and designs to prevent malfunction.

1. G3NA malfunction or fire damage may occasionally occur. Do not apply excessive voltage or current to the G3NA terminals.
2. Heat Dissipation
   - Do not obstruct the airflow to the G3NA or heat sink. Heat generated from an G3NA error may occasionally cause the output element to short, or cause fire damage.
   - Be sure to prevent the ambient temperature from rising due to the heat radiation of the G3NA. If the G3NA is mounted inside a panel, install a fan so that the interior of the panel is fully ventilated.
   - Mount the G3NA in the specified orientation. If the G3NA is mounted in any other orientation, abnormal heat generation may cause output elements to short or may cause burning.
   - Do not use the G3NA if the heat sink fins are bent, e.g., as the result of dropping the G3NA. Heat dissipation characteristics will be reduced, possibly causing G3NA failure.
   - Apply a thin layer of Momentive Performance Materials's YG6260 or Shin-Etsu Chemical's G747, or a similar product to the heat sink before mounting
   - If a material with high thermal resistance, such as wood, is used, heat generated by the G3NA may occasionally cause fire or burning. When installing the G3NA directly into a control panel so that the panel can be used as a heat sink, use a panel material with low thermal resistance, such as aluminum or steel.
   - Use the specified heat sink or one with equivalent or better characteristics.
3. Wire the G3NA and tighten screws correctly, observing the following precautions
   Heat generated by a terminal error may occasionally result in fire damage. Do not operate if the screws on the output terminal are loose.
   - Abnormal heat generated by wires may occasionally result in fire damage. Use wires suitable for the load current.
   - Abnormal heat generated by terminals may occasionally result in fire damage. Do not operate if the screws on the output terminal are loose.

   Tightening Torque

Screw size	Tightening torque
M4	1.2 N·m
M5	2.0 N·m

   - Abnormal heat generated by terminals may occasionally result in fire damage. When tightening terminal screws, be sure that no non-conductive foreign matter is caught in screw.
   - For GN3A Relays of 40 A or higher, use crimp terminals of an appropriate size for the wire diameter for M5 terminals.
   - Do not use any wires with damaged sheaths. These may cause electric shock or leakage.
   - Do not place wiring in the same conduit or duct as high-voltage lines. Induction may cause malfunction or damage.
   - Use wires of an appropriate length, otherwise malfunction and damage may result due to induction.
   - Mount the DIN Track securely. Otherwise, the DIN Track may fall.
   - Be sure that the G3NA clicks into place when mounting it to DIN Track. The G3NA may fall if it is not mounted correctly.
   - Do not mount the G3NA when your hands are oily or dirty, e.g., with metal powder. These may cause G3NA failure.
   - Tighten the G3NA screws securely.
     Tightening torque: 0.78 to 0.98 N·m
   - Tighten the heat sink screws securely.
     Tightening torque: 0.98 to 1.47 N·m
4. Preventing Overheating
   When using the High-capacity Heat Sink (Y92B-P250NF), always use a thermostat or other method to protect from overheating in the event that the fan stops.
5. Do Not Touch Fan Blades
   When the fan is operating, do not touch the fan blades with any part of your body or allow foreign matter to come into contact with the blades. Always attach the enclosed finger guard when using the G3NA.
6. Operating Conditions
   - Only use the G3NA with loads that are within the rated values. Using the G3NA with loads outside the rated values may result in malfunction, damage, or burning.
   - Use a power supply within the rated frequency range. Using a power supply outside the rated frequency range may result in malfunction, damage, or burning.
7. Do not transport the G3NA under the following conditions. Failure or malfunction may occur.
   - Conditions under which the G3NA will be exposed to water
   - High temperatures or high humidity
   - Without proper packing

Operating and Storage Locations

Do not use or store the G3NA in the following locations. Doing so may result in damage, malfunction, or deterioration of performance characteristics.

- Do not use or store in locations subject to direct sunlight.
- Do not use in locations subject to ambient temperatures outside the range –20 to 60°C.
- Do not use in locations subject to relative humidity outside the range 45% to 85% or locations subject to condensation as the result of severe changes in temperature.
- Do not store in locations subject to ambient temperatures outside the range –30 to 70°C.
- Do not use or store in locations subject to corrosive or flammable gases.
- Do not use or store in locations subject to dust (especially iron dust) or salts.
- Do not use or store in locations subject to shock or vibration.
- Do not use or store in locations subject to exposure to water, oil, or chemicals.
- Do not use or store in locations subject to high temperatures or high humidity.
- Do not use or store in locations subject to salt damage.
- Do not use or store in locations subject to rain or water drops.

■ Precautions for Correct Use

Please observe the following precautions to prevent failure to operate, malfunction, or undesirable effect on product performance.

Before Actual Operation

1. The G3NA in operation may cause an unexpected accident. Therefore it is necessary to test the G3NA under the variety of conditions that are possible. As for the characteristics of the G3NA, it is necessary to consider differences in characteristics between individual SSRs.
2. Unless otherwise specified, the ratings in this catalog are tested values in a temperature range between 15°C and 30°C, a relative humidity range between 25% and 85%, and an atmospheric pressure range between 88 and 106 kPa (standard test conditions according to JIS C5442). It will be necessary to provide the above conditions as well as the load conditions if the user wants to confirm the ratings of specific G3NAs.

Mounting Method

SSR Mounting Pitch (Panel Mounting)

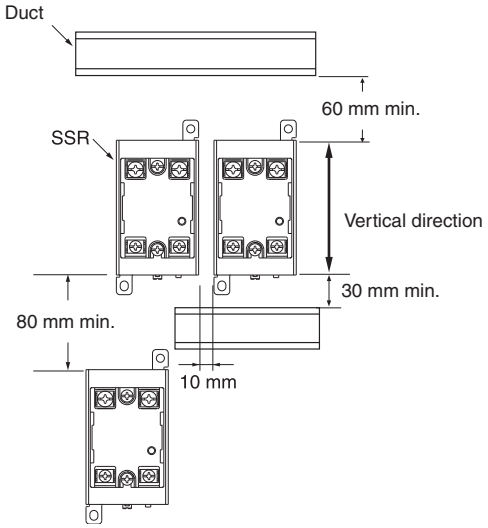

Relationship between SSRs and Duct Height

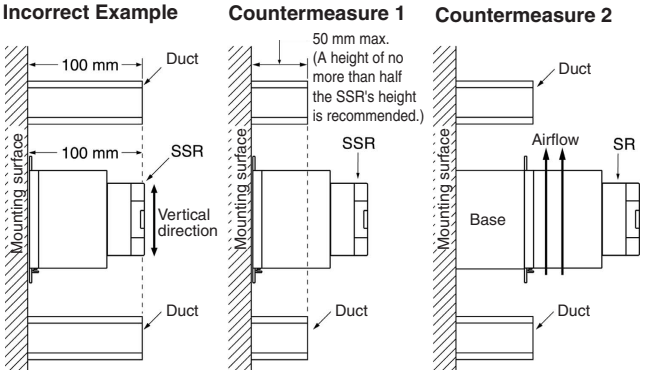

Do not surround the SSR with ducts, otherwise the heat radiation of the SSR will be adversely affected.

Use short ducts.

If the ducts cannot be shortened, place the SSR on a metal base so that it is not surrounded by the ducts.

Ventilation Outside the Control Panel

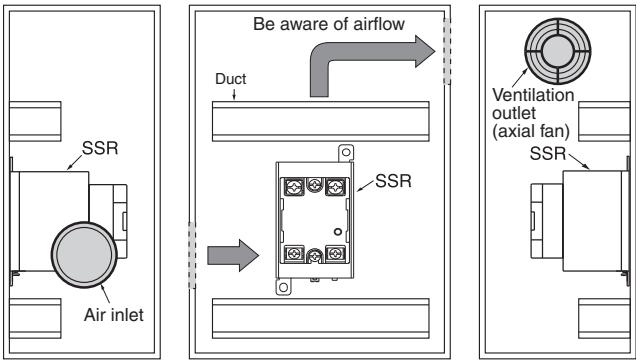

If the air inlet or air outlet has a filter, clean the filter regularly to prevent it from clogging to ensure an efficient flow of air.

Do not locate any objects around the air inlet or air outlet, otherwise the objects may obstruct the proper ventilation of the control panel.

A heat exchanger, if used, should be located in front of the SSRs to ensure the efficiency of the heat exchanger.

- Please reduce the ambient temperature of SSRs.
  The rated load current of an SSR is measured at an ambient temperature of 40°C.
- An SSR uses a semiconductor in the output element. This causes the temperature inside the control panel to increase due to heating resulting from the passage of electrical current through the load. To restrict heating, attach a fan to the ventilation outlet or air inlet of the control panel to ventilate the panel. This will reduce the ambient temperature of the SSRs and thus increase reliability. (Generally, each 10 °C reduction in temperature will double the expected life.)

Load current (A)	5 A	10 A	20 A	25 A	40 A	50 A	75 A	90 A
Required number of fans per SSR	0.08	0.16	0.31	0.4	0.62	0.8	1.2	1.44

Example: For 10 SSRs with load currents of 10 A,
$0.16 \times 10 = 1.6$
Thus, 2 fans would be required.

Size of fans: 92 mm^2, Air volume: 0.7 m^3/min,
Ambient temperature of control panel: 30 °C

If there are other instruments that generate heat in the control panel other than SSRs, additional ventilation will be required.

High-capacity Heat Sink (Y92B-P250NF)

DIN-track Mounting

- Assembled DIN Tracks are heavy. Mount the DIN Tracks securely. Be sure that the Heat Sink is securely locked to the DIN Track.
- Attach End Plates (PFP-M, order separately) to both ends of the Units on the DIN Track to hold them in place.
- To mount a Heat Sink to a DIN Track, press down at the point indicated by arrow 1 in the diagram and then press in the Heat Sink at the point indicated by arrow 2.

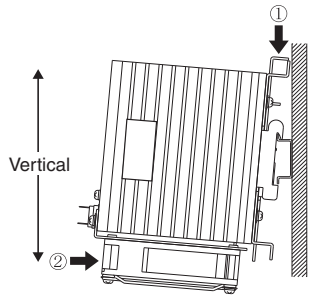

Applicable DIN Track

Mounting is possible on TE35-15Fe (IEC 60715) DIN tracks. DIN tracks from the following manufacturers can be used.

Manufacturer	Thickness: 1.5 mm	Thickness: 2.3 mm
Schneider	AM1-DE2000	---
WAGO	210-114 or 210-197	210-118
PHOENIX	N35/15	N35/15/15-2.3

Direct Mounting

- Prepare mounting holes as shown in the diagram. Tightening torque: 0.98 to 1.47 N·m

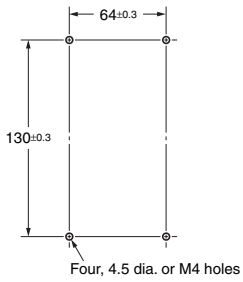

- When mounting a Heat Sink directly, first remove the Fan Unit, then mount the Heat Sink by itself before attaching the Fan Unit again. (Remove the two screws shown in the following diagram.)

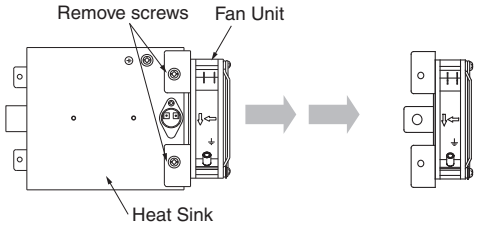

- First, temporarily mount the Heat Sink with the bottom two screws and then attach the top two screws with the mounting bracket sandwiched between the Heat Sink and mounting surface. Finally, tighten all four screws.

Ratings and Characteristics of High-capacity Heat Sink (Y92B-P250NF)

Fan Ratings

Rated voltage	200 V
Operating voltage	85% to 110% of rated voltage
Frequency	50/60 Hz
Rated current (See note.)	0.061 A at 50 Hz 0.052 A at 60 Hz
Rated speed (See note.)	2,600 r/min at 50 Hz 3,050 r/min at 60 Hz

Note: Average values.

Thermostat Ratings

Operating temperature	Approx. 90°C
Contact ratings	8 A at 250 VAC, resistive load 5 A at 30 VDC, resistive load

Fan Characteristics

Motor type	Single-phase shading coil induction motor (2-pole, open type)
Terminal type	Terminals
Insulation class	IEC class B (130°C) UL class A (105°C) CSA class A (105°C)
Insulation resistance	100 MΩ min. (at 500 VDC) between all power supply connections and uncharged metal parts.
Insulation withstand voltage	2,000 VAC (1 minute) between all power supply connections and uncharged metal parts.
Ambient operating temperature	–30 to 70°C (no icing)
Ambient storage temperature	–40 to 85°C (no icing)
Ambient humidity	25 to 85%
Protection	Impedance protection
Materials	Frame : Die-cast aluminum Blades : Glass polycarbonate
Bearings	Ball bearings
Weight	Approx. 300 g
Compliant standards	PSE, EN/IEC 60335 (CE marking compliant)
Certified standards	UL/CSA

- Use a commercial power supply (50/60 Hz) for the Fan.
- Be sure to turn OFF the power supply and wait for the blades to stop before inspecting the Fan.
- High-precision ball bearings are used in the fan and these may be damaged if the Fan is dropped or otherwise subjected to shock. The life and characteristics of the Fan will be reduced if the bearings are damaged. Do not subject the Fan to shock.
- The life of the Fan depends on the ambient temperature, As a guideline, the Fan life is 40,000 hours for continuous usage at 40°C.
- Be sure there are no objects near the air vents that would restrict air flow and no loose objects, such as electrical lines.
- The Fan is an OMRON R87F-A4A-93HP (200 VAC) Fan. Use the same model of Fan for replacement.
- The recommended tightening torque for the Fan is 0.44 N·m.
- Terminals equivalent to Faston #110 are used for the Fan power supply terminals.
- Refer to the following table for the OMRON Fan power supply plug cables (order separately).

Cable length	UL certified	Complies with Electrical Appliance and Material Safety Law (Japan)
1 m	R87F-PC	R87F-PCJT
2 m	R87F-PC-20	R87F-PCJT-20

- Connect the ground screw hole on the fan to **PE**.

Preventing Overheating with a High-capacity Heat Sink (Y92B-P250NF)

- When the High-capacity Heat Sink is used, high-capacity switching at 75 A or 90 A requires forced cooling with a fan. Connect the Fan to a power supply according to its ratings specifications.
- If the Fan stops due to a power supply error, due to foreign matter in the power supply connection, or due to aging, the Heat Sink will heat to high temperatures, possibly resulting in failure of the SSR or adverse affects on other devices. Implement an overheating prevention measure, such as turning OFF the load current, if the Heat Sink overheats.
- A thermostat is provided to detect overheating. The thermostat uses a NC contact, i.e., the circuit will be opened for overheating. This thermostat can be used to stop the operation of the SSR. Implement an overheating prevention measure by using this signal to output an alarm or perform another response applicable to the system. Also, confirm that there is no problem with the overall system.
- Do not connect the thermostat directly to the load power supply. Connect it to a contactor or other shutoff device connected above the SSR.
- Terminals equivalent to Faston #187 are used for the thermostat terminals.
- Do not place heat-dissipating silicon grease on the thermostat.
- Do not solder the thermostat terminals.
- The following diagram shows a protective circuit example.

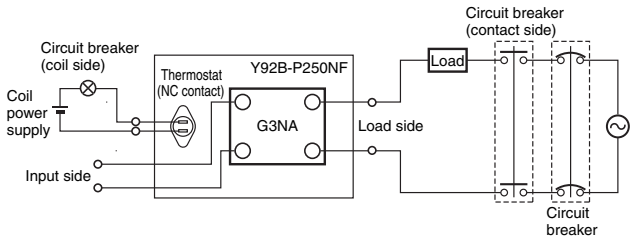

Ventilating a High-capacity Heat Sink (Y92B-P250NF)

- Refer to *Ventilation Outside the Control Panel*.

Operating Conditions

- Do not apply currents exceeding the rated current otherwise, the temperature of the G3NA may rise excessively.
- As protection against accidents due to short-circuiting, be sure to install protective devices, such as fuses and no-fuse breakers, on the power supply side.
- Do not apply overvoltages to the input circuit or output circuit. Failure or burning may result.
- Do not drop the G3NA or otherwise subject it to abnormal shock. Malfunction or failure may result.
- Keep the cooling system running continuously during the ON/OFF operation of the SSR. This is to allow residual heat to dissipate while the SSR is OFF. (load current 75 A, 90 A models)
- The Y92B-P250NF is a Class 1 device.
  If compliance with EU standards is required, ground the Y92B-P250NF.
- Use the ground terminal on the Heat Sink.
  Screw size: M5 Tightening torque: 2 N·m
  Do not use the ground terminal on the fan.

EMC Directive Compliance

EMC directives can be complied with under the following conditions.

1. AC-switching models

- A capacitor must be connected to the input power supply.
- A capacitor, varistor and toroidal core must be connected to the load power supply.
- The input cable must be less than 3 m.

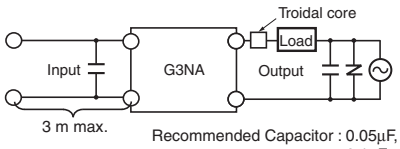

Recommended Capacitor : 0.05μF, 500 VAC (Load)
0.1μF, 250 VAC (Input)
Recommended Varistor : 470 V, 1750 A
Recommended Troidal core : NEC/TOKIN:ESD-R-25B or equivalent

2. DC-switching models

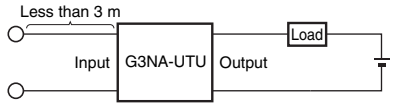

- The input cable must be less than 3 m.

Loss Time

The loss time will increase when the G3NA is used at a low applied voltage or current. Be sure that this does not cause any problems.

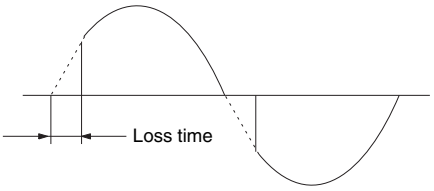

Using DC Loads

For a DC or L load, a diode should be connected in parallel the load to absorb the counter electromotive force of the load.

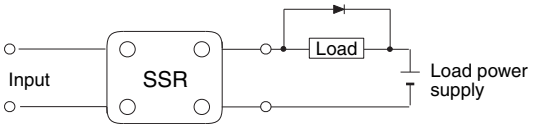

Reverse Connection

The output terminal side of the G3NA-D210B-UTU is connected to a built-in diode to protect the SSR from damage that may result from reverse connection. The SSR, however, cannot withstand one minute or more if the wires are connected in reverse. Therefore, pay the utmost attention not to make polarity mistakes on the load side.

Installation and Mounting

- Mount the G3NA securely with screws.
  Keep the screws tightened to a torque of 0.78 to 0.98 N·m.
- Mount the Heat Sink securely with screws.
  Keep the screws tightened to a torque of 0.98 to 1.47 N·m.

■ Precautions on Operating and Storage Environments

1. Operating Ambient Temperature

The rated value for the ambient operating temperature of the G3NA is for when there is no heat build-up. For this reason, under conditions where heat dissipation is not good due to poor ventilation, and where heat may build up easily, the actual temperature of the G3NA may exceed the rated value resulting in malfunction or burning.

When using the G3NA, design the system to allow heat dissipation sufficient to stay below the *Load Current vs. Ambient Temperature* characteristic curve. Note also that the ambient temperature of the G3NA may increase as a result of environmental conditions (e.g., climate or air-conditioning) and operating conditions (e.g., mounting in an airtight panel).

2. Transportation

When transporting the G3NA, observe the following points. Not doing so may result in damage, malfunction, or deterioration of performance characteristics.

- Do not drop the G3NA or subject it to severe vibration or shock.
- Do not transport the G3NA if it is wet.
- Do not transport the G3NA under high temperatures or humidity.
- Do not transport the G3NA without packing it properly.

3. Vibration and Shock

Do not subject the G3NA to excessive vibration or shock. Otherwise the G3NA may malfunction and internal components may be deformed or damaged, resulting in failure of the G3NA to operate.

To prevent the G3NA from abnormal vibration, do not install the G3NA in locations or by means that will subject it to vibration from other devices, such as motors.

4. Solvents

Do not allow the G3NA or the resin portion of the Fan's thermostat to come in contact with solvents, such as thinners or gasoline. Doing so will dissolve the markings on the G3NA.

5. Oil

Do not allow the G3NA terminal cover to come in contact with oil. Doing so will cause the cover to crack and become cloudy.

■ Operation

1. Leakage Current

A leakage current flows through a snubber circuit in the G3NA even when there is no power input. Therefore, always turn OFF the power to the input or load and check that it is safe before replacing or wiring the G3NA.

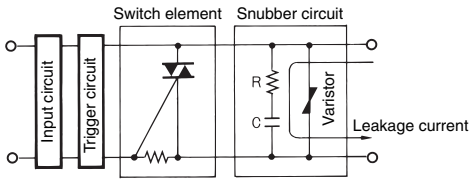

2. Screw Tightening Torque

Tighten the G3NA terminal screws properly. If the screws are not tight, the G3NA will be damaged by heat generated when the power is ON. Perform wiring using the specified tightening torque.

3. Handling Relays

Do not mount the G3NA when your hands are oily or dirty, e.g., with metal powder. These may cause G3NA failure.

4. Do Not Drop

Be careful not to drop a Relay or Heat Sink onto any part of your body while working. Injury may result. This is particularly true for the High-capacity Heat Sink (Y92B-P250NF), which weighs 2.5 kg.

ALL DIMENSIONS SHOWN ARE IN MILLIMETERS.

To convert millimeters into inches, multiply by 0.03937. To convert grams into ounces, multiply by 0.03527.

In the interest of product improvement, specifications are subject to change without notice.

Terms and Conditions Agreement

Read and understand this catalog.

Please read and understand this catalog before purchasing the products. Please consult your OMRON representative if you have any questions or comments.

Warranties.

(a) Exclusive Warranty. Omron's exclusive warranty is that the Products will be free from defects in materials and workmanship for a period of twelve months from the date of sale by Omron (or such other period expressed in writing by Omron). Omron disclaims all other warranties, express or implied.

(b) Limitations. OMRON MAKES NO WARRANTY OR REPRESENTATION, EXPRESS OR IMPLIED, ABOUT NON-INFRINGEMENT, MERCHANTABILITY OR FITNESS FOR A PARTICULAR PURPOSE OF THE PRODUCTS. BUYER ACKNOWLEDGES THAT IT ALONE HAS DETERMINED THAT THE PRODUCTS WILL SUITABLY MEET THE REQUIREMENTS OF THEIR INTENDED USE.

Omron further disclaims all warranties and responsibility of any type for claims or expenses based on infringement by the Products or otherwise of any intellectual property right. (c) Buyer Remedy. Omron's sole obligation hereunder shall be, at Omron's election, to (i) replace (in the form originally shipped with Buyer responsible for labor charges for removal or replacement thereof) the non-complying Product, (ii) repair the non-complying Product, or (iii) repay or credit Buyer an amount equal to the purchase price of the non-complying Product; provided that in no event shall Omron be responsible for warranty, repair, indemnity or any other claims or expenses regarding the Products unless Omron's analysis confirms that the Products were properly handled, stored, installed and maintained and not subject to contamination, abuse, misuse or inappropriate modification. Return of any Products by Buyer must be approved in writing by Omron before shipment. Omron Companies shall not be liable for the suitability or unsuitability or the results from the use of Products in combination with any electrical or electronic components, circuits, system assemblies or any other materials or substances or environments. Any advice, recommendations or information given orally or in writing, are not to be construed as an amendment or addition to the above warranty.

See http://www.omron.com/global/ or contact your Omron representative for published information.

Limitation on Liability; Etc.

OMRON COMPANIES SHALL NOT BE LIABLE FOR SPECIAL, INDIRECT, INCIDENTAL, OR CONSEQUENTIAL DAMAGES, LOSS OF PROFITS OR PRODUCTION OR COMMERCIAL LOSS IN ANY WAY CONNECTED WITH THE PRODUCTS, WHETHER SUCH CLAIM IS BASED IN CONTRACT, WARRANTY, NEGLIGENCE OR STRICT LIABILITY.

Further, in no event shall liability of Omron Companies exceed the individual price of the Product on which liability is asserted.

Suitability of Use.

Omron Companies shall not be responsible for conformity with any standards, codes or regulations which apply to the combination of the Product in the Buyer's application or use of the Product. At Buyer's request, Omron will provide applicable third party certification documents identifying ratings and limitations of use which apply to the Product. This information by itself is not sufficient for a complete determination of the suitability of the Product in combination with the end product, machine, system, or other application or use. Buyer shall be solely responsible for determining appropriateness of the particular Product with respect to Buyer's application, product or system. Buyer shall take application responsibility in all cases.

NEVER USE THE PRODUCT FOR AN APPLICATION INVOLVING SERIOUS RISK TO LIFE OR PROPERTY OR IN LARGE QUANTITIES WITHOUT ENSURING THAT THE SYSTEM AS A WHOLE HAS BEEN DESIGNED TO ADDRESS THE RISKS, AND THAT THE OMRON PRODUCT(S) IS PROPERLY RATED AND INSTALLED FOR THE INTENDED USE WITHIN THE OVERALL EQUIPMENT OR SYSTEM.

Programmable Products.

Omron Companies shall not be responsible for the user's programming of a programmable Product, or any consequence thereof.

Performance Data.

Data presented in Omron Company websites, catalogs and other materials is provided as a guide for the user in determining suitability and does not constitute a warranty. It may represent the result of Omron's test conditions, and the user must correlate it to actual application requirements. Actual performance is subject to the Omron's Warranty and Limitations of Liability.

Change in Specifications.

Product specifications and accessories may be changed at any time based on improvements and other reasons. It is our practice to change part numbers when published ratings or features are changed, or when significant construction changes are made. However, some specifications of the Product may be changed without any notice. When in doubt, special part numbers may be assigned to fix or establish key specifications for your application. Please consult with your Omron's representative at any time to confirm actual specifications of purchased Product.

Errors and Omissions.

Information presented by Omron Companies has been checked and is believed to be accurate; however, no responsibility is assumed for clerical, typographical or proofreading errors or omissions.

טל': 073-2001311 פקס: 03-9244245
משרד ראשי: סמטת התבור 4, א.ת. סגולה ת.ד. 4710, פתח-תקוה 4914602
סניף צפון: יוסף לוי 48, ת.ד. 1468 , קרית ביאליק
סניף דרום: ניצנים 17, ת.ד. 2068 , עומר
אתר: www.ateka.co.il

OMRON Corporation **Industrial Automation Company**
Kyoto, JAPAN
Contact: www.ia.omron.com

Regional Headquarters
OMRON EUROPE B.V.
Wegalaan 67-69, 2132 JD Hoofddorp
The Netherlands
Tel: (31)2356-81-300/Fax: (31)2356-81-388

Authorized Distributor:

© OMRON Corporation 2006-2019 All Rights Reserved.
In the interest of product improvement,
specifications are subject to change without notice.

CSM_2_2_0420
Cat. No. J166-E1-05 0919(1206)